DRC
PZ25-12000013
12/03/2025

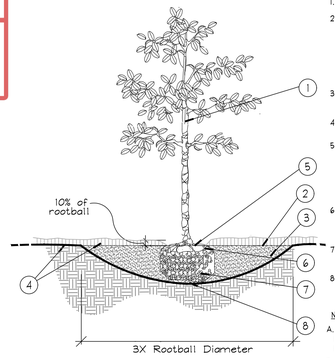

1. TRUNK
2. 3" MINIMUM OF MULCH AS SPECIFIED. WHERE TREES ARE PLACED IN SOD, MULCH RING FOR TREES COVER ROOTBALL SIDES AND EXTEND 18" BEYOND ON ALL SIDES. NO MULCH SHALL BE PLACED OVER TRUNK.
3. SHALLOW/ WIDE PLANT HOLE; TOP SHALL BE 3X THE SIZE OF ROOTBALL.
4. FINISHED GRADE - LANDSCAPE SOIL
5. FIND TOP-MOST ROOT ON ROOTBALL; POSITION ROOTBALL SO THIS TOP ROOT IS 1-2" ABOVE LANDSCAPE SOIL. (APPROX. 10% OF ROOTBALL SHALL BE ABOVE LANDSCAPE SOIL)
6. B & B OR CONTAINER (SEE SPECIFICATIONS FOR ROOT BALL REQUIREMENTS).
7. REMOVE ALL SYNTHETIC MATERIALS FROM ROOTBALL.
8. ROOTBALLS SHALL BE PLACED ON UNDISTURBED SOIL TO PREVENT SETTLING.

NOTES:
A. CONTRACTOR SHALL ASSURE PERCOLATION OF ALL PLANTING PITS PRIOR TO INSTALLATION.
B. FINAL TREE STAKING DETAILS AND PLACEMENT TO BE APPROVED BY OWNER.
C. SEE PRE-APPROVED STAKING METHODS, THIS SHEET

* ALL TREES SHALL BE PLUMB VERTICALLY WITHIN A TOLERANCE OF THREE DEGREES, UNLESS OTHERWISE DIRECTED BY OWNER'S REPRESENTATIVE.

A Tree Planting
SECTION — NTS

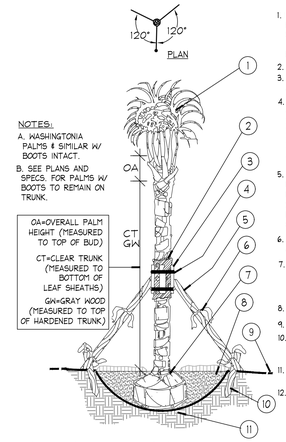

NOTES:
A. MASHINGTONIA PALMS & SIMILAR W/ BOOTS INTACT.
B. SEE PLANS AND SPECS. FOR PALMS W/ BOOTS TO REMAIN ON TRUNK.

OA=OVERALL PALM HEIGHT (MEASURED TO TOP OF BUD)
CT=CLEAR TRUNK (MEASURED TO BOTTOM OF LEAF SHEATHS)
GW=GRAY WOOD (MEASURED TO TOP OF HARDENED TRUNK)

1. MINIMUM OF NINE (9) GOOD PALM FRONDS; PRUNE AND TIE FRONDS WITH HEMP TWINE. SABAL PALMS TO BE SELECTIVELY "HURRICANE CUT", LEAVING ONLY NEWLY-EMERGING GROWTH.
2. 5 LAYERS OF BURLAP TO PROTECT TRUNK.
3. FIVE (5) 18"L, 2X4 WOOD BATTENS. UNTREATED, #2
4. SECURE BATTENS WITH TWO (2) 3/4" CARBON STEEL BANDS TO HOLD BATTENS IN PLACE. NO NAILS SHALL BE DRIVEN INTO PALM. HEIGHT OF BATTENS SHALL BE LOCATED PROPORTIONATELY TO THE HEIGHT OF THE PALM FOR ADEQUATE BRACING.
5. THREE (3) 8', 2X4 SUPPORTS. NAIL (DRILL AND NAIL IF NECESSARY) TO BATTENS AND 2" X 4" STAKES. PALMS SHALL BE PLUMB VERTICALLY UNLESS OTHERWISE NOTED.
6. PROVIDE FLAGGING AT MIDPOINT AND BASE OF SUPPORTS.
7. TOP-MOST ROOT SHALL BE VISIBLE AT THE SURFACE OF THE ROOTBALL, SLIGHTLY ABOVE SURROUNDING GRADE.
8. 3" SPECIFIED MULCH
9. FINISH GRADE
10. 24"L (MIN.) 2X4 P.T. WOOD STAKES, NAIL TO SUPPORT POLES
11. PREPARED PLANTING SOIL AS SPECIFIED
12. ALTERNATE PALM ANCHORING SYSTEMS MAY BE SUBSTITUTED UPON APPROVAL BY OWNER OR OWNER'S REPRESENTATIVE

PRE-APPROVED SYSTEMS:
#BROOKS TREE BRACE SYSTEM
#ARBOR TIE TREE BRACING

B Palm Planting and Staking
SECTION — NTS

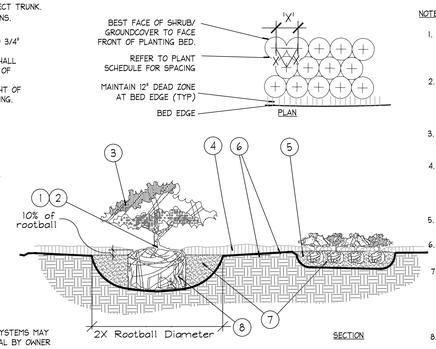

NOTES:
1. FIND POINT WHERE TOPMOST ROOT EMERGES FROM TRUNK WITHIN 2" OF SURFACE. CLEAR EXCESS SOIL IF NECESSARY.
2. TOP 10% OF SHRUB AND GROUNDCOVER ROOTBALLS TO BE PLANTED ABOVE THE LANDSCAPE GRADE. DO NOT COVER EXPOSED 10% ON SIDES WITH SOIL.
3. PRUNE ALL LIKE SHRUBS WITHIN A PLANTED MASS TO ACHIEVE A UNIFORM MASS/HEIGHT.
4. 3" MINIMUM MULCH AS SPECIFIED - DO NOT COVER ENTIRE SHRUB ROOTBALL OR CREATE 'WATER RINGS'. ONLY COVER SIDES OF ROOTBALL WITH MULCH
5. EXCAVATE ENTIRE BED SPECIFIED FOR GROUNDCOVER BED.
6. FINISHED GRADE (SEE GRADING PLAN).
7. PREPARED PLANTING SOIL AS SPECIFIED. NOTE: WHEN GROUND-COVERS AND SHRUBS USED IN MASSES, ENTIRE BED TO BE AMENDED WITH PLANTING SOIL MIX AS SPECIFIED.
8. SCARIFY ROOTBALL SIDES AND BOTTOM.

* ALL SHRUBS AND GROUNDCOVERS SHALL BE PLUMB VERTICALLY, UNLESS OTHERWISE DIRECTED BY OWNER'S REPRESENTATIVE.

C Shrub / Groundcover Planting
PLAN/SECTION — NTS

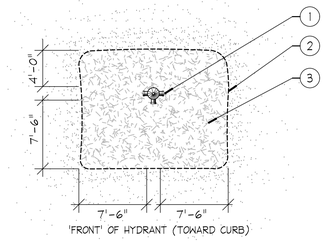

1. FIRE HYDRANT
2. NO PLANT MATERIAL SHALL BE PLACED WITHIN SHOWN RADIUS OF ALL PROPOSED OR EXISTING FIRE HYDRANTS. CONTRACTOR SHALL ADJUST PLANT MATERIAL SO THAT NO CONFLICTS WITH FIRE HYDRANTS OCCUR ON SITE.
3. PROVIDE A MULCH, 3" DEPTH MIN., SURROUNDING AREA INDICATED.

D Fire Hydrant Clear Zone
PLAN — NTS

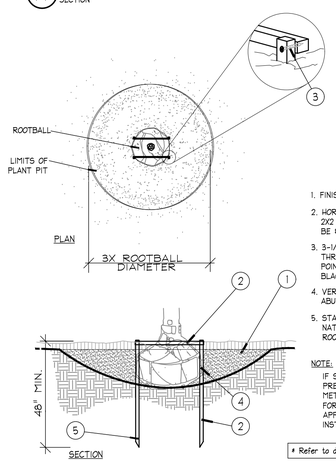

1. FINISH GRADE
2. HORIZONTAL 2X2 SCREWED TO 2X2 STAKE. ALL WOOD SHALL BE #2 UNTREATED.
3. 3-1/2" DRYWALL SCREW, THREAD SIZE 12, SHARP POINT, FULL THREAD, BLACK PHOSPHATE FINISH
4. VERTICAL STAKES SHALL ABUT SIDE OF ROOTBALL
5. STAKES TO EXTEND INTO NATIVE SOIL BY 1-1/2 X THE ROOTBALL DEPTH MIN.

NOTE:
IF SPATIAL REQUIREMENTS PRECLUDE STAKING WITH THIS METHOD, SUBMIT ALTERNATE FOR LANDSCAPE ARCHITECT'S APPROVAL PRIOR TO INSTALLING PLANT.

* Refer to details B and D for planting

E Staking - up to 65 gal. or B&B to 3-1/2" Cal.
PLAN/SECTION — NTS

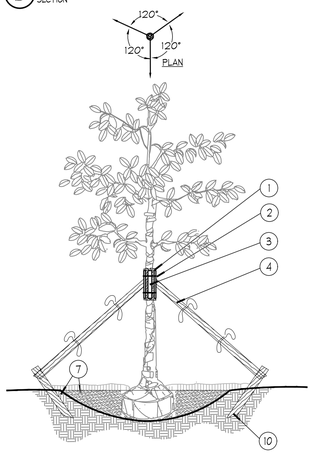

1. FIVE (5) LAYERS OF BURLAP TO PROTECT TRUNK.
2. TWO STEEL BANDS TO SECURE BATTENS
3. FIVE 2 X 4 X 18"L WOOD BATTENS
4. THREE (3) 2" X 8' LODGE POLES. DRILL, USING GALVANIZED SCREWS, TO BATTENS AND 2" X 4" STAKES. NO SCREWS SHALL PENETRATE TREE. FLAG AT MIDPOINT AND AT BASE.
10. 2" x 4" x 3' (MIN), P.T. WOOD STAKES BURIED 3' BELOW FINISHED GRADE.
7. FINISHED GRADE (SEE GRADING PLAN)

NOTES:
A. ALL TREES SHALL BE PLUMB VERTICALLY WITHIN A TOLERANCE OF THREE DEGREES, UNLESS OTHERWISE DIRECTED BY OWNER'S REPRESENTATIVE.
B. FINAL TREE STAKING DETAILS AND PLACEMENT TO BE APPROVED BY OWNER.
C. ALTERNATE TREE ANCHORING SYSTEMS MAY BE SUBSTITUTED FOR WOOD STAKING SYSTEM UPON APPROVAL BY OWNER OR OWNER'S REPRESENTATIVE

PRE-APPROVED SYSTEMS:
#BROOKS TREE BRACE SYSTEM
#ARBOR TIE TREE BRACING

D. RUBBER HOSE/WIRE SYSTEMS ARE NOT ALLOWED.

* Refer to details B and D for planting

F Large Tree Staking - 100 Gal + or B&B 4" +
SECTION — NTS

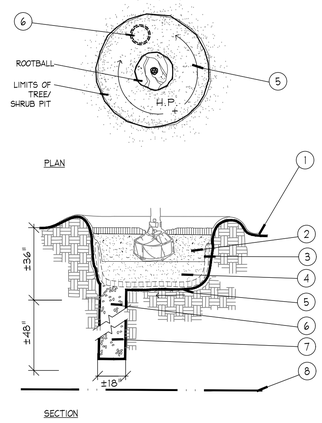

1. FINISH GRADE
2. BACKFILL WITH PREPARED PLANTING SOIL MIX AS SPECIFIED.
3. FILTER CLOTH, MIRAFI 500X OR BETTER
4. 12" CLEAN SAND, COMPACTED. ADJUST LAYER THICKNESS SO TOP OF ROOTBALL IS AT LEAST 1" ABOVE FINISHED GRADE.
5. SLOPE BOTTOM TO DRAIN
6. ±18"ø AUGURED HOLE PENETRATE THROUGH OCCLUDING LAYER TO WATER TABLE OR TO A DEPTH OF 7' TO ASSURE PROPER PERCOLATION.
7. BACKFILL WITH 1/2" - 3/4" GRAVEL.
8. WATER TABLE. (DEPTH VARIES)

NOTE:
FOR A PARKING ISLAND PLANTING SITUATION, CONTRACTOR TO BACKFILL ENTIRE LENGTH OF PLANTING AREA TO WITHIN 6" OF BACK OF CURB OR EDGE OF PAVEMENT.

REFER TO NOTE 0.3 OF WRITTEN SPECIFICATIONS FOR ADDITIONAL INFORMATION.

G Poor Drainage Condition
PLAN/SECTION — NTS

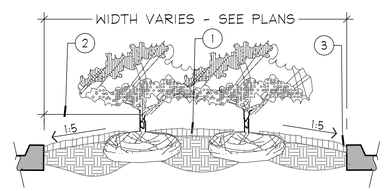

PLANTER ISLAND NOTES
1. CROWN ISLANDS @ 5:1 SLOPES (OR AS SPECIFIED ON THE LANDSCAPE PLANS).
2. CLEAR ZONE: 36" MIN. FROM BACK OF CURB TO CENTER OF NEAREST SHRUB. CLEAR ZONE SHALL CONTAIN 3" CONTINUOUS MULCH OR TURF, SEE PLANS. SEE DETAIL 'I' FOR PLANTER MEDIANS ADJACENT TO PARKING SPACES.
3. 1" MIN VERTICAL CLEARANCE, TOP OF CURB TO TOP OF MULCH.

- EXCAVATE CONTINUOUS 36" DEEP (FROM TOP OF CURB) FOR ENTIRE LENGTH AND WIDTH OF ISLAND & BACKFILL WITH APPROVED PLANTING MIX.
- PROTECT AND RETAIN ALL CURBS AND BASE. COMPACTED SUBGRADE TO REMAIN FOR STRUCTURAL SUPPORT OF CURB SYSTEM (TYP).
- ALL ISLANDS SHALL UTILIZE POOR DRAINAGE DETAIL WHEN PERCOLATION RATES ARE 2" PER HOUR OR LESS.

H Planted Parking Lot Islands / Medians
SECTION — NTS

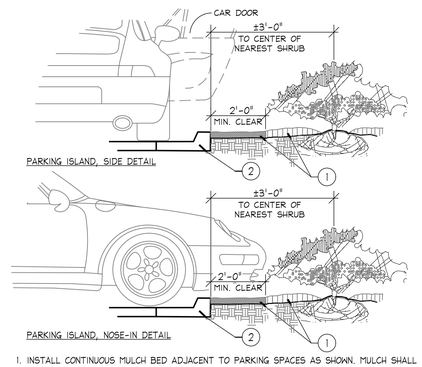

1. INSTALL CONTINUOUS MULCH BED ADJACENT TO PARKING SPACES AS SHOWN. MULCH SHALL BE MIN. 3" DEEP.
   NO POP-UP IRRIGATION HEADS SHALL BE LOCATED WITHIN 24" OF A PARKING SPACE ON ANY SIDE
2. CURB OR PARKING LOT EDGE, BY OTHERS

I Parking Space/Curb Planting
SECTION — NTS

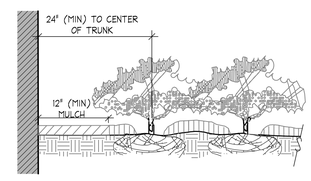

NOTES
* CLEAR ZONE: 24" MIN. FROM BUILDING TO CENTER OF NEAREST SHRUB.

J Plantings Adjacent to Buildings
SECTION — NTS

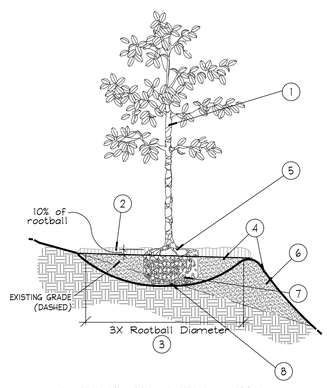

1. TREES, PALMS, AND LARGE SHRUBS (15 GAL OR GREATER) SHALL BE PLANTED IN SIMILAR MANNER
2. 3" MINIMUM OF MULCH AS SPECIFIED. WHERE TREES ARE PLACED IN SOD, MULCH RING FOR TREES COVER ROOTBALL SIDES AND EXTEND 18" BEYOND ON ALL SIDES. NO MULCH SHALL BE PLACED OVER TRUNK.
3. SHALLOW/ WIDE PLANT HOLE; TOP SHALL BE 3X THE SIZE OF ROOTBALL.
4. FINISHED GRADE - LANDSCAPE SOIL
5. FIND TOP-MOST ROOT ON ROOTBALL; POSITION ROOTBALL SO THIS TOP ROOT IS 1-2" ABOVE LANDSCAPE SOIL. (APPROX. 10% OF ROOTBALL SHALL BE ABOVE LANDSCAPE SOIL)
6. BERM SOIL SO THAT TOP OF BERM IS JUST BELOW THE TOP 10% OF THE TOP OF THE ROOTBALL. SLOPE DOWNHILL PORTION OF BERM AS REQUIRED TO MEET EXISTING GRADE.
7. B & B OR CONTAINER REMOVE ALL SYNTHETIC MATERIALS FROM ROOTBALL. (SEE SPECIFICATIONS FOR OTHER ROOT BALL REQUIREMENTS)
8. ROOTBALLS SHALL BE PLACED ON UNDISTURBED SOIL TO PREVENT SETTLING.

NOTES:
A. CONTRACTOR SHALL ASSURE PERCOLATION OF ALL PLANTING PITS PRIOR TO INSTALLATION.
B. FINAL TREE STAKING DETAILS AND PLACEMENT TO BE APPROVED BY OWNER.
C. SEE PRE-APPROVED STAKING METHODS, THIS SHEET

* ALL TREES SHALL BE PLUMB VERTICALLY WITHIN A TOLERANCE OF THREE DEGREES, UNLESS OTHERWISE DIRECTED BY OWNER'S REPRESENTATIVE.

K Planting on a Slope
SECTION — NTS

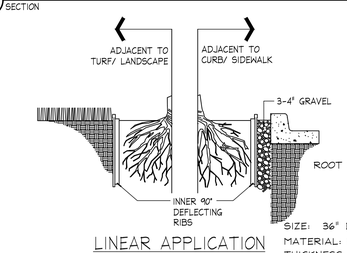

LINEAR APPLICATION

ROOT BARRIER BY: Century Root Barrier (714)632-7083
(or) DeepRoot (800)458-7668
(or approved equal)

SIZE: 36" D
MATERIAL: POLYETHYLENE WITH ULTRAVIOLET INHIBITORS
THICKNESS: .085 IN. (min.)

NOTES:
1. INSTALLATION TO BE COMPLETED IN ACCORDANCE WITH MANUFACTURER'S SPECIFICATIONS.
2. INSTALL AS REQUIRED, PER PLAN NOTES.
3. SUBMIT PRODUCT DATA FOR APPROVAL.

L Root Barrier
Barrier Detail — NTS

THE PRESENCE OF GROUNDWATER SHOULD BE ANTICIPATED. CONTRACTOR'S BID SHALL INCLUDE CONSIDERATION FOR ADDRESSING THIS ISSUE AND OBTAINING ALL NECESSARY PERMITS.

ALL ELEVATIONS SHOWN ON THESE PLANS ARE BASED ON THE NAVD 88. TO CONVERT THE ELEVATION HEREON TO NGVD 29 ADD 1.51 FEET.

811 KNOW WHAT'S BELOW ALWAYS CALL 811 BEFORE YOU DIG
It's fast. It's free. It's the law.
www.callsunshine.com

No.	REVISIONS	DATE	BY

Kimley»Horn
© 2025 KIMLEY-HORN AND ASSOCIATES, INC.
8201 PETERS ROAD, SUITE 2200, PLANTATION, FL 33324
PHONE: 954-535-5100 FAX: 954-739-2247
WWW.KIMLEY-HORN.COM REGISTRY No. 696

Thomas C. Hargett
Digitally signed by Thomas C. Hargett
DN: CN=Thomas C. Hargett, O=Kimley-Horn and Associates, Inc., C=US
Date: 2025.12.03 08:57:00 -05'00'
LA 6666912 | 09

KHA PROJECT 143360001
DATE SEPT. 2025
SCALE AS SHOWN
DESIGNED BY NR
DRAWN BY NR
CHECKED BY TH

LANDSCAPE DETAILS

2690 WEST SAMPLE ROAD
PREPARED FOR
NATIONAL EXPRESS WASH LLC
CITY OF POMPANO BEACH FLORIDA

SHEET NUMBER
L2.10

Plotted By:Hargett, Tom Sheet Set:2690 WEST SAMPLE ROAD Layout:L2.10 LANDSCAPE DETAILS September 16, 2025 01:09:52pm K:\TH_civil\143 Jobs\143360001 2690 west sample road civil eng\Design\CADD\plansheets\LANDSCAPE PLAN.dwg
This document, together with the concepts and designs presented herein, as an instrument of service, is intended only for the specific purpose and client for which it was prepared. Reuse of and improper reliance on this document without written authorization and adaptation by Kimley-Horn and Associates, Inc. shall be without liability to Kimley-Horn and Associates, Inc.